Industrial Display Monitor

Open Frame Type

10.4" SVGA Open Frame Color TFT Display Kit

OPD-1106

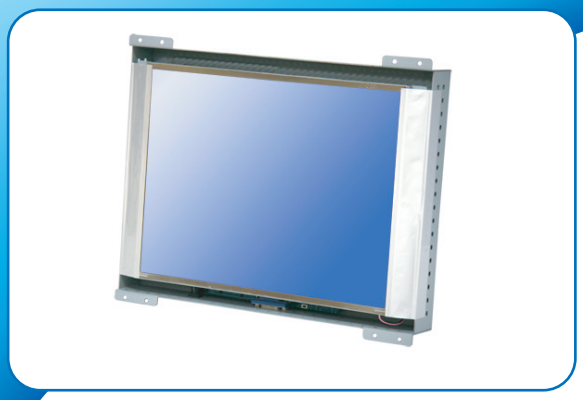

Display Specifications

Display	10.4" Color Active TFT Flat Panel Display
Luminance	250 cd/m^2
Viewing Angle	130/110 (H/V)
Resolutions	800 x 600 (native mode), 262K colors
Backlight Lifetime	20,000 hrs
Touch Screen	Analog resistive (optional)
OSD Control	On the back side
I/O Connectors	1xDC power input, 1xVGA, optional:DVI,S-Video,RCA, touch (RS-232 or USB)
Power Input	DC 12V only

Mechanical Specifications

Construction	Steel chassis
Dimensions	260(W) x 213(H)x 38(D)mm
Weight	0.9kg (1.98 lbs)

Environment Specifications

Operating Temperature	0~50°C (32~122°F)
Storage Temperature	-20~60°C (-4~140°F)
Relative Humidity	10~90% @40 C Non-condensing, without touch screen
Vibration	1G peak, 5~500 Hz (Random)
Shock	15G peak acceleration (11 msec. duration)
Certificate	Meet CE / FCC Class A
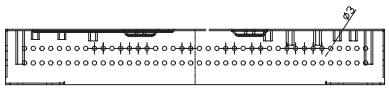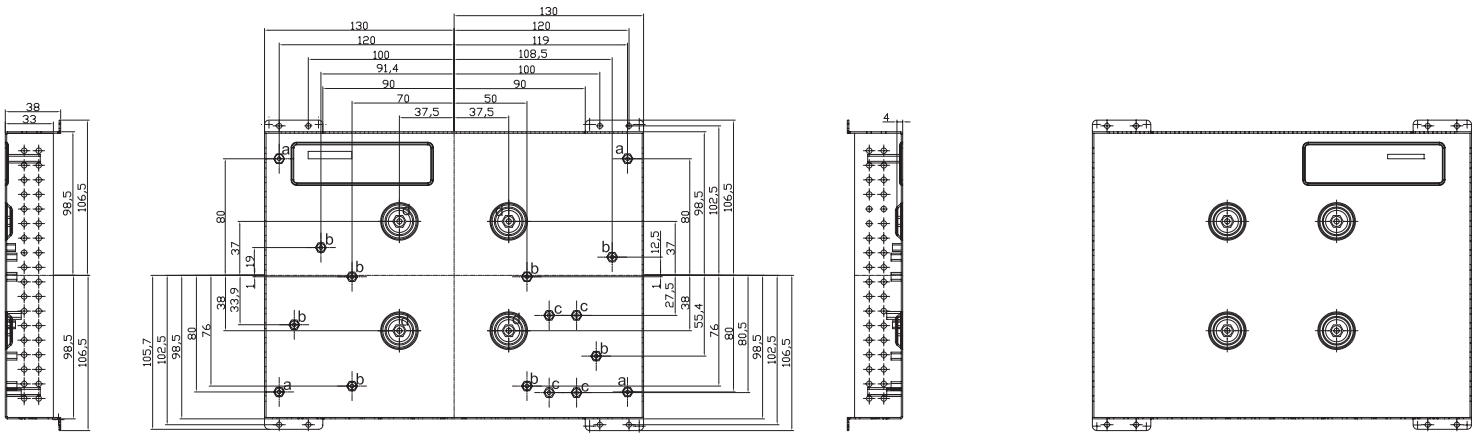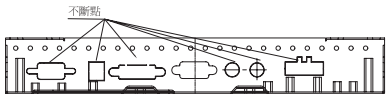
Dimensions